Inverting Octal 3-STATE Buffer

MM74HC240

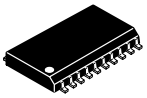

SOIC−20 WB
CASE 751D−05

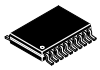

TSSOP−20 WB
CASE 948E

General Description

The MM74HC240 3−STATE buffer utilizes advanced silicon−gate CMOS technology. It possesses high drive current outputs which enable high speed operation even when driving large bus capacitances. These circuits achieve speeds comparable to low power Schottky devices, while retaining the advantage of CMOS circuitry, i.e., high noise immunity and low power consumption. It has a fanout of 15 LS−TTL equivalent inputs.

The MM74HC240 is an inverting buffer and has two active LOW enables ($1\overline{G}$ and $2\overline{G}$). Each enable independently controls 4 buffers.

All inputs are protected from damage due to static discharge by diodes to V_{CC} and ground.

Features

- Typical Propagation Delay: 12 ns
- 3−STATE Outputs for Connection to System Buses
- Wide Power Supply Range: 2–6 V
- Low Quiescent Supply Current: 160 μA (74 Series)
- Output Current: 6 mA
- These are Pb−Free Devices

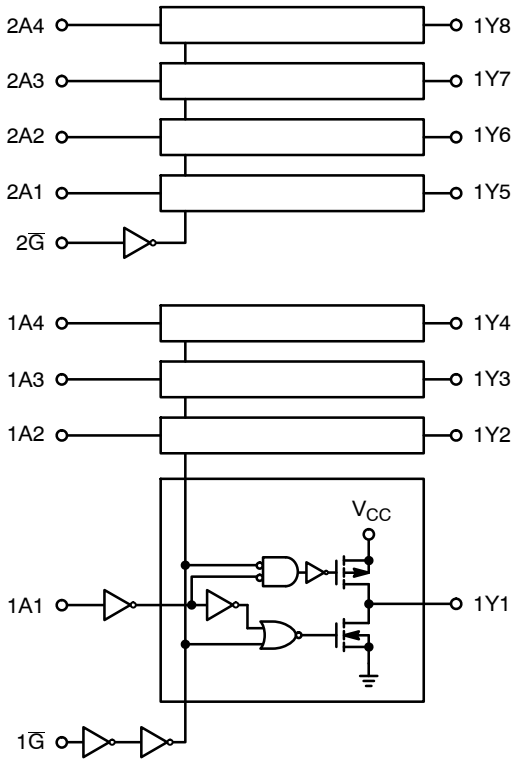

Figure 1. Logic Diagram

MARKING DIAGRAMS

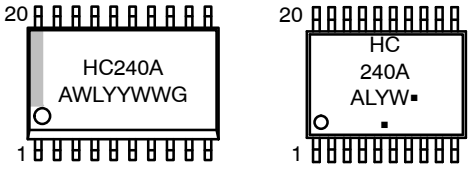

(SOIC−20 WB) (TSSOP−20 WB)

HC240A	= Specific Device Code
A	= Assembly Location
L/WL	= Wafer Lot
Y/YY	= Year
W/WW	= Work Week
▪ or G	= Pb−Free Package

(Note: Microdot may be in either location)

CONNECTION DIAGRAM

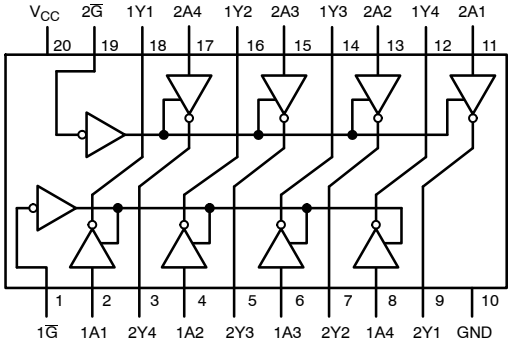

(Top View)

TRUTH TABLE

$1\overline{G}$	1A	1Y	$2\overline{G}$	2A	2Y
L	L	H	L	L	H
L	H	H	L	H	H
H	L	Z	H	L	Z
H	H	Z	H	H	Z

H = HIGH Level
L = LOW Level
Z = HIGH Impedance

ORDERING INFORMATION

See detailed ordering, marking and shipping information in the package dimensions section on page 4 of this data sheet.

© Semiconductor Components Industries, LLC, 2005

MAXIMUM RATINGS (Note 1)

Symbol	Parameter	Value	Unit
V_{CC}	Supply Voltage	−0.5 to +7.0	V
V_{IN}	DC Input Voltage	−0.5 to V_{CC} + 0.5	V
V_{OUT}	DC Output Voltage	−0.5 to V_{CC} + 0.5	V
I_{IK}, I_{OK}	Clamp Diode Current	±20	mA
I_{OUT}	DC Output Current, per Pin	±35	mA
I_{CC}	DC VCC or GND Current, per Pin	±70	mA
T_{STG}	Storage Temperature Range	−65 to +150	°C
P_D	Power Dissipation (Note 2) S. O. Package Only	 600 500	mW
T_L	Lead Temperature (Soldering 10 seconds)	260	°C

Stresses exceeding those listed in the Maximum Ratings table may damage the device. If any of these limits are exceeded, device functionality should not be assumed, damage may occur and reliability may be affected.

1. Unless otherwise specified all voltages are referenced to ground.
2. Power Dissipation temperature derating − plastic “N” package: 12 mW/°C from 65°C to 85°C.

RECOMMENDED OPERATIONG CONDITIONS (Note 1)

Symbol	Parameter	Min	Max	Unit
V_{CC}	Supply Voltage	2	6	V
V_{IN}, V_{OUT}	DC Input or Output Voltage	0	V_{CC}	V
T_A	Operating Temperature Range	−55	+125	°C
t_r, t_f	Input Rise or Fall Times V_{CC} = 2.0 V V_{CC} = 4.5 V V_{CC} = 6.0 V	 − − −	 1000 500 400	ns

Functional operation above the stresses listed in the Recommended Operating Ranges is not implied. Extended exposure to stresses beyond the Recommended Operating Ranges limits may affect device reliability.

DC ELECTRICAL CHARACTERISTICS (Note 3)

Symbol	Parameter	Conditions	V_{CC} (V)	T_A = 25°C		−40°C ≤ T_A ≤ 85°C	−55°C ≤ T_A ≤ 125°C	Unit
				Typ	Guaranteed Limits			
V_{IH}	Minimum HIGH Level Input Voltage		2.0 4.5 6.0	− − −	1.5 3.15 4.2	1.5 3.15 4.2	1.5 3.15 4.2	V
V_{IL}	Maximum LOW Level Input Voltage		2.0 4.5 6.0	− − −	0.5 1.35 1.8	0.5 1.35 1.8	0.5 1.35 1.8	V
V_{OH}	Minimum HIGH Level Output Voltage	V_{IN} = V_{IH} or V_{IL} $\|I_{OUT}\|$ ≤ 20 μA	2.0 4.5 6.0	2.0 4.5 6.0	1.9 4.4 5.9	1.9 4.4 5.9	1.9 4.4 5.9	V
		V_{IN} = V_{IH} or V_{IL} $\|I_{OUT}\|$ ≤ 6.0 mA $\|I_{OUT}\|$ ≤ 7.8 mA	 4.5 6.0	 4.2 5.7	 3.98 5.48	 3.84 5.34	 3.7 5.2	V
V_{OL}	Maximum LOW Level Output Voltage	V_{IN} = V_{IH} or V_{IL} $\|I_{OUT}\|$ ≤ 20 μA	2.0 4.5 6.0	0 0 0	0.1 0.1 0.1	0.1 0.1 0.1	0.1 0.1 0.1	V
		V_{IN} = V_{IH} or V_{IL} $\|I_{OUT}\|$ ≤ 6.0 mA $\|I_{OUT}\|$ ≤ 7.8 mA	 4.5 6.0	 0.2 0.2	 0.26 0.26	 0.33 0.33	 0.4 0.4	V
I_{IN}	Maximum Input Current	V_{IN} = V_{CC} or GND	6.0	−	±0.1	±1.0	±1.0	μA

DC ELECTRICAL CHARACTERISTICS (Note 3) (continued)

Symbol	Parameter	Conditions	V_{CC} (V)	T_A = 25°C Typ	T_A = 25°C Guaranteed Limits	−40°C ≤ T_A ≤ 85°C Guaranteed Limits	−55°C ≤ T_A ≤ 125°C Guaranteed Limits	Unit
I_{OZ}	Maximum 3−STATE Output Leakage Current	$V_{IN} = V_{IH}$ or V_{IL} $V_{OUT} = V_{CC}$ or GND $\overline{G} = V_{IH}$, $G = V_{IL}$	6.0	–	±0.5	±5	±10	μA
I_{CC}	Maximum Quiescent Supply Current	$V_{IN} = V_{CC}$ or GND $I_{OUT} = 0$ μA	6.0	–	8.0	80	160	μA

3. For a power supply of 5 V ±10% the worst case output voltages (V_{OH}, and V_{OL}) occur for HC at 4.5 V. Thus the 4.5 V values should be used when designing with this supply. Worst case V_{IH} and V_{IL} occur at V_{CC} = 5.5 V and 4.5 V respectively. (The V_{IH} value at 5.5 V is 3.85 V.) The worst case leakage current (I_{IN}, I_{CC}, and I_{OZ}) occur for CMOS at the higher voltage and so the 6.0 V values should be used.

AC ELECTRICAL CHARACTERISTICS

Symbol	Parameter	Conditions	Typ	Guaranteed Limit	Unit
t_{PHL}, t_{PLH}	Maximum Propagation Delay	C_L = 45 pF	12	18	ns
t_{PZH}, t_{PZL}	Maximum Enable Delay to Active Output	R_L = 1 kΩ, C_L = 45 pF	14	28	ns
t_{PHZ}, t_{PLZ}	Maximum Disable Delay from Active Output	R_L = 1 kΩ, C_L = 5 pF	13	25	ns

AC ELECTRICAL CHARACTERISTICS (V_{CC} = 2.0 V to 6.0 V, C_L = 50 pF, $t_r = t_f$ = 6 ns (unless otherwise specified))

Symbol	Parameter	Conditions	V_{CC} (V)	T_A = 25°C Typ	T_A = 25°C Guaranteed Limits	−40°C ≤ T_A ≤ 85°C Guaranteed Limits	−55°C ≤ T_A ≤ 125°C Guaranteed Limits	Unit
t_{PHL}, t_{PLH}	Maximum Propagation Delay	C_L = 50 pF C_L = 150 pF	2.0 2.0	55 80	100 150	126 190	149 224	ns
		C_L = 50 pF C_L = 150 pF	4.5 4.5	12 22	20 30	25 38	30 45	ns
		C_L = 50 pF C_L = 150 pF	6.0 6.0	11 28	17 26	21 32	25 38	ns
t_{PZH}, t_{PZL}	Maximum Output Enable Time	R_L = 1 kΩ C_L = 50 pF C_L = 150 pF	2.0 2.0	75 100	150 200	189 252	224 298	ns
		C_L = 50 pF C_L = 150 pF	4.5 4.5	15 20	30 40	38 50	45 60	ns
		C_L = 50 pF C_L = 150 pF	6.0 6.0	13 17	26 34	32 43	38 51	ns
t_{PHZ}, t_{PLZ}	Maximum Output Disable Time	R_L = 1 kΩ C_L = 50 pF	2.0 4.5 6.0	75 15 13	150 30 26	189 38 32	224 45 38	ns
t_{TLH}, t_{THL}	Maximum Output Rise and Fall Time		2.0 4.5 6.0	– – –	60 12 10	75 15 13	90 18 15	ns
C_{PD}	Power Dissipation Capacitance (Note 4)	(per buffer) $\overline{G} = V_{IH}$ $\overline{G} = V_{IL}$	– –	12 50	– –	– –	– –	pF
C_{IN}	Maximum Input Capacitance		–	5	10	10	10	pF
C_{OUT}	Maximum Output Capacitance		–	10	20	20	20	pF

4. C_{PD} determines the no load dynamic power consumption, $P_D = C_{PD} \cdot V_{CC}^2 \cdot f + I_{CC} \cdot V_{CC}$, and the no load dynamic current consumption, $I_S = C_{PD} \cdot V_{CC} \cdot f + I_{CC}$.

ORDERING INFORMATION

Device	Package	Shipping†
MM74HC240WM	SOIC−20 WB (Pb−Free)	38 Units / Tube
MM74HC240WMX	SOIC−20 WB (Pb−Free)	1000 Units / Tape & Reel
MM74HC240MTCX	TSSOP−20 WB (Pb−Free)	2500 Units / Tape & Reel

†For information on tape and reel specifications, including part orientation and tape sizes, please refer to our Tape and Reel Packaging Specifications Brochure, BRD8011/D.

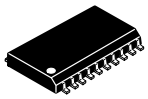

SCALE 1:1

SOIC−20 WB
CASE 751D−05
ISSUE H

DATE 22 APR 2015

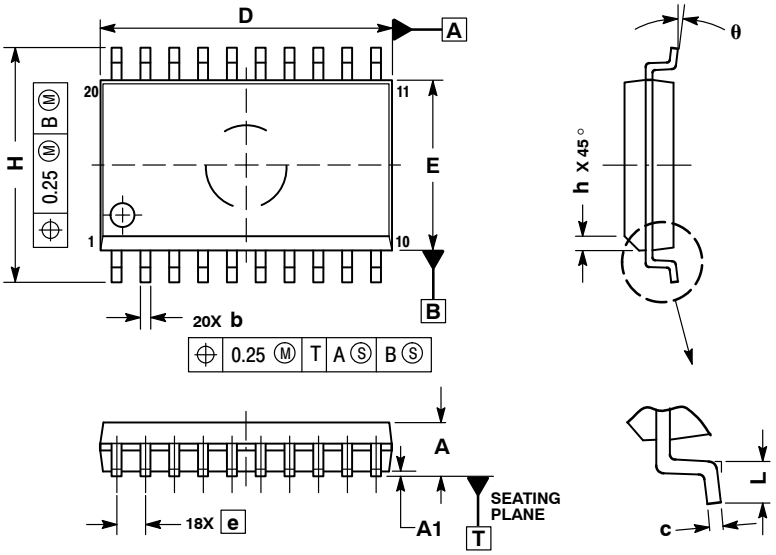

NOTES:
1. DIMENSIONS ARE IN MILLIMETERS.
2. INTERPRET DIMENSIONS AND TOLERANCES PER ASME Y14.5M, 1994.
3. DIMENSIONS D AND E DO NOT INCLUDE MOLD PROTRUSION.
4. MAXIMUM MOLD PROTRUSION 0.15 PER SIDE.
5. DIMENSION B DOES NOT INCLUDE DAMBAR PROTRUSION. ALLOWABLE PROTRUSION SHALL BE 0.13 TOTAL IN EXCESS OF B DIMENSION AT MAXIMUM MATERIAL CONDITION.

	MILLIMETERS	
DIM	MIN	MAX
A	2.35	2.65
A1	0.10	0.25
b	0.35	0.49
c	0.23	0.32
D	12.65	12.95
E	7.40	7.60
e	1.27 BSC	
H	10.05	10.55
h	0.25	0.75
L	0.50	0.90
θ	0°	7°

RECOMMENDED SOLDERING FOOTPRINT*

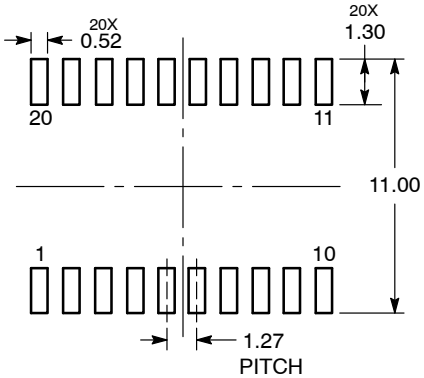

DIMENSIONS: MILLIMETERS

*For additional information on our Pb−Free strategy and soldering details, please download the **onsemi** Soldering and Mounting Techniques Reference Manual, SOLDERRM/D.

GENERIC MARKING DIAGRAM*

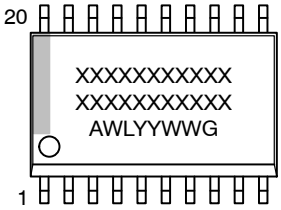

XXXXX = Specific Device Code
A = Assembly Location
WL = Wafer Lot
YY = Year
WW = Work Week
G = Pb−Free Package

*This information is generic. Please refer to device data sheet for actual part marking. Pb−Free indicator, "G" or microdot "▪", may or may not be present. Some products may not follow the Generic Marking.

DOCUMENT NUMBER:	98ASB42343B	Electronic versions are uncontrolled except when accessed directly from the Document Repository. Printed versions are uncontrolled except when stamped "CONTROLLED COPY" in red.
DESCRIPTION:	SOIC−20 WB	PAGE 1 OF 1

onsemi and onsemi are trademarks of Semiconductor Components Industries, LLC dba **onsemi** or its subsidiaries in the United States and/or other countries. **onsemi** reserves the right to make changes without further notice to any products herein. **onsemi** makes no warranty, representation or guarantee regarding the suitability of its products for any particular purpose, nor does **onsemi** assume any liability arising out of the application or use of any product or circuit, and specifically disclaims any and all liability, including without limitation special, consequential or incidental damages. **onsemi** does not convey any license under its patent rights nor the rights of others.

TSSOP−20 WB
CASE 948E
ISSUE D

DATE 17 FEB 2016

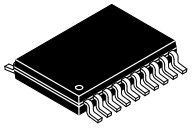

SCALE 2:1

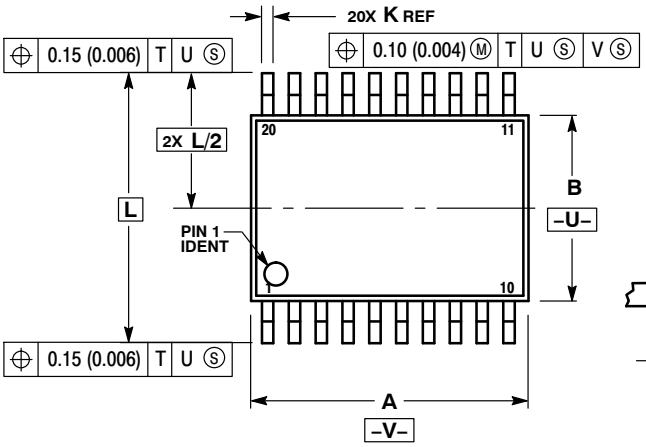

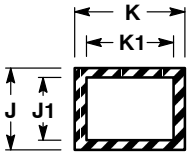

SECTION N−N

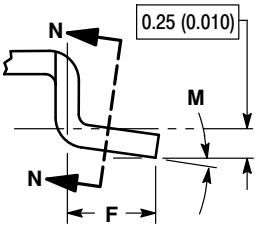

DETAIL E

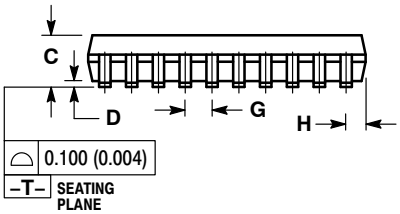

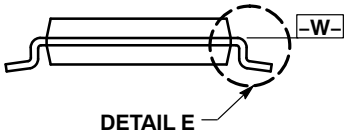

NOTES:
1. DIMENSIONING AND TOLERANCING PER ANSI Y14.5M, 1982.
2. CONTROLLING DIMENSION: MILLIMETER.
3. DIMENSION A DOES NOT INCLUDE MOLD FLASH, PROTRUSIONS OR GATE BURRS. MOLD FLASH OR GATE BURRS SHALL NOT EXCEED 0.15 (0.006) PER SIDE.
4. DIMENSION B DOES NOT INCLUDE INTERLEAD FLASH OR PROTRUSION. INTERLEAD FLASH OR PROTRUSION SHALL NOT EXCEED 0.25 (0.010) PER SIDE.
5. DIMENSION K DOES NOT INCLUDE DAMBAR PROTRUSION. ALLOWABLE DAMBAR PROTRUSION SHALL BE 0.08 (0.003) TOTAL IN EXCESS OF THE K DIMENSION AT MAXIMUM MATERIAL CONDITION.
6. TERMINAL NUMBERS ARE SHOWN FOR REFERENCE ONLY.
7. DIMENSION A AND B ARE TO BE DETERMINED AT DATUM PLANE −W−.

	MILLIMETERS		INCHES	
DIM	MIN	MAX	MIN	MAX
A	6.40	6.60	0.252	0.260
B	4.30	4.50	0.169	0.177
C	---	1.20	---	0.047
D	0.05	0.15	0.002	0.006
F	0.50	0.75	0.020	0.030
G	0.65 BSC		0.026 BSC	
H	0.27	0.37	0.011	0.015
J	0.09	0.20	0.004	0.008
J1	0.09	0.16	0.004	0.006
K	0.19	0.30	0.007	0.012
K1	0.19	0.25	0.007	0.010
L	6.40 BSC		0.252 BSC	
M	0°	8°	0°	8°

SOLDERING FOOTPRINT

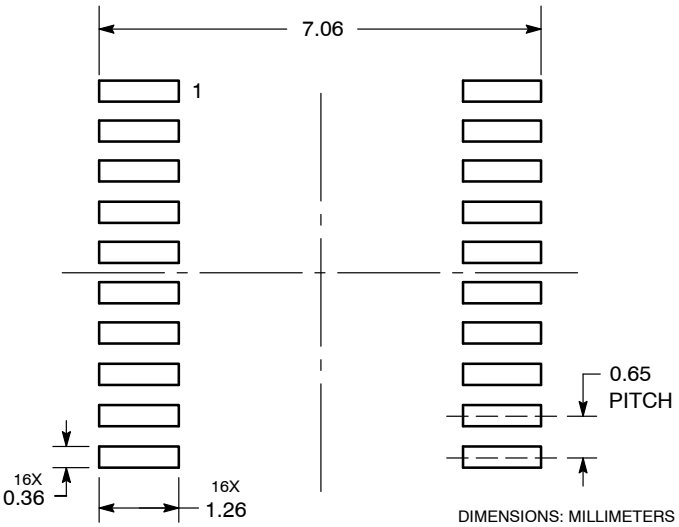

DIMENSIONS: MILLIMETERS

GENERIC MARKING DIAGRAM*

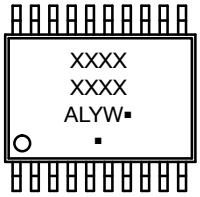

A = Assembly Location
L = Wafer Lot
Y = Year
W = Work Week
▪ = Pb−Free Package

(Note: Microdot may be in either location)

*This information is generic. Please refer to device data sheet for actual part marking. Pb−Free indicator, “G” or microdot “ ▪”, may or may not be present.

DOCUMENT NUMBER:	98ASH70169A	Electronic versions are uncontrolled except when accessed directly from the Document Repository. Printed versions are uncontrolled except when stamped “CONTROLLED COPY” in red.
DESCRIPTION:	TSSOP−20 WB	PAGE 1 OF 1

ON Semiconductor and ON are trademarks of Semiconductor Components Industries, LLC dba ON Semiconductor or its subsidiaries in the United States and/or other countries. ON Semiconductor reserves the right to make changes without further notice to any products herein. ON Semiconductor makes no warranty, representation or guarantee regarding the suitability of its products for any particular purpose, nor does ON Semiconductor assume any liability arising out of the application or use of any product or circuit, and specifically disclaims any and all liability, including without limitation special, consequential or incidental damages. ON Semiconductor does not convey any license under its patent rights nor the rights of others.

© Semiconductor Components Industries, LLC, 2019

onsemi, onsemi, and other names, marks, and brands are registered and/or common law trademarks of Semiconductor Components Industries, LLC dba "**onsemi**" or its affiliates and/or subsidiaries in the United States and/or other countries. **onsemi** owns the rights to a number of patents, trademarks, copyrights, trade secrets, and other intellectual property. A listing of **onsemi**'s product/patent coverage may be accessed at www.onsemi.com/site/pdf/Patent−Marking.pdf. **onsemi** reserves the right to make changes at any time to any products or information herein, without notice. The information herein is provided "as−is" and **onsemi** makes no warranty, representation or guarantee regarding the accuracy of the information, product features, availability, functionality, or suitability of its products for any particular purpose, nor does **onsemi** assume any liability arising out of the application or use of any product or circuit, and specifically disclaims any and all liability, including without limitation special, consequential or incidental damages. Buyer is responsible for its products and applications using **onsemi** products, including compliance with all laws, regulations and safety requirements or standards, regardless of any support or applications information provided by **onsemi**. "Typical" parameters which may be provided in **onsemi** data sheets and/or specifications can and do vary in different applications and actual performance may vary over time. All operating parameters, including "Typicals" must be validated for each customer application by customer's technical experts. **onsemi** does not convey any license under any of its intellectual property rights nor the rights of others. **onsemi** products are not designed, intended, or authorized for use as a critical component in life support systems or any FDA Class 3 medical devices or medical devices with a same or similar classification in a foreign jurisdiction or any devices intended for implantation in the human body. Should Buyer purchase or use **onsemi** products for any such unintended or unauthorized application, Buyer shall indemnify and hold **onsemi** and its officers, employees, subsidiaries, affiliates, and distributors harmless against all claims, costs, damages, and expenses, and reasonable attorney fees arising out of, directly or indirectly, any claim of personal injury or death associated with such unintended or unauthorized use, even if such claim alleges that **onsemi** was negligent regarding the design or manufacture of the part. **onsemi** is an Equal Opportunity/Affirmative Action Employer. This literature is subject to all applicable copyright laws and is not for resale in any manner.

ADDITIONAL INFORMATION

TECHNICAL PUBLICATIONS:
Technical Library: www.onsemi.com/design/resources/technical−documentation
onsemi Website: www.onsemi.com

ONLINE SUPPORT: www.onsemi.com/support
For additional information, please contact your local Sales Representative at
www.onsemi.com/support/sales